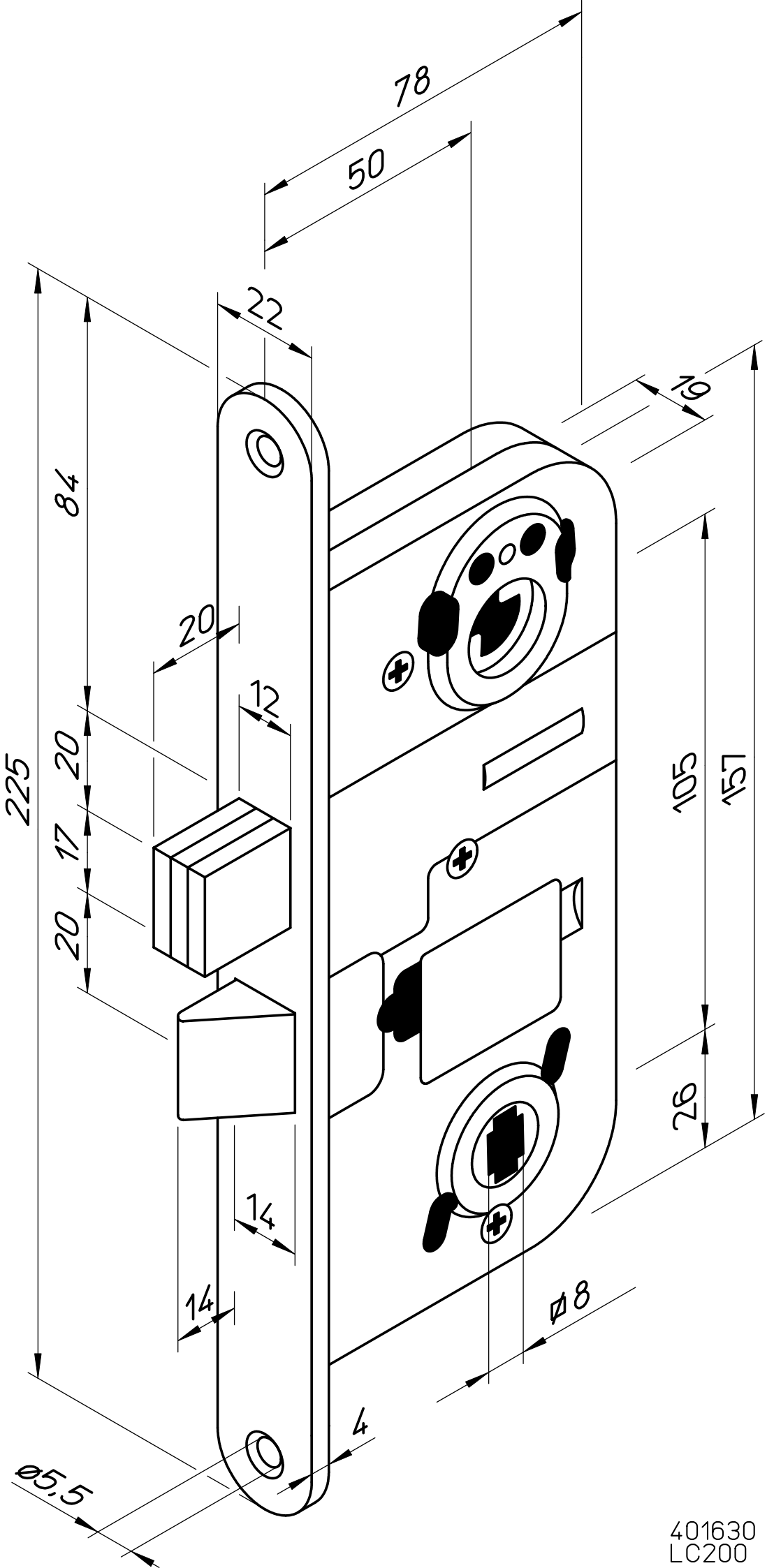

401630
LC200