Abloy Oy Wahlforssinkatu 20 P.O. Box 108 FI-80101 Joensuu, Finland | Tel. +358 20 599 2501 | abloy.com

ABLOY® EL532

DIN standard single point high security motor lock for wooden and metal doors

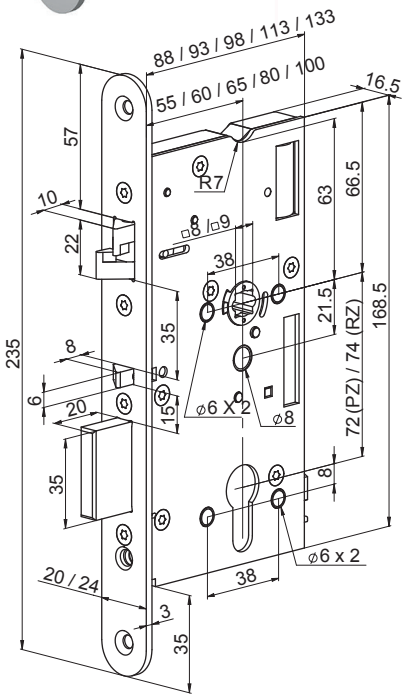

Product description
High security lock EL532 is used in environments where convenience, higher security, high durability or door automation is needed. The integrated monitoring contacts from the lock can be connected to the different systems.
Deadbolt is withdrawn inside the lockcase by motor and double action latch is released, when electrical control is on. Door is opened from outside by using door pull.
Also possible to connect with door automatics for full hands-free operation.
Electrically controlled handle function, therefore not for EXIT (EN179/EN1125) doors.
When door closes, dead bolt is thrown out automatically, double action latch is blocked and the lock case is secured in two points.

Overview of Advantages
- Motorized bolt traction for push&pull and door automatics use
- Day/night mode , controlled egress
- Electric anti-tampering: if deadbolt is thrown out when door is not closed, it is withdrawn in automatically
- Mechanical automatic locking system
- Non handed, left / right
- Burglary-resistant due to dead bolt with 20 mm throw
- Suitable for fire doors
- Mechanical override with cylinder
- Back-up function: If deadbolt is withdrawn by motor and then power is cut, deadbolt is thrown out immediately (closed door) or allowed to throw out (when door is closed).
- Monitoring functions
    - Door status
    - Handle down
    - Bolt deadlocked
    - Bolt in
    - Key cylinder used
    - Sabotage loop

Scope of delivery
- 1 pcs lock case
- 1 pcs control unit EA430
- Operating manual

Ordered separately
- Strike plate (e.g. EA324)
- Cable EA230 (6m)
- Lead cover EA280/281
- Handle/pull set (e.g x/242/115 PZBL or PZPZ)
- Cylinder (e.g. CY321T)

Technical data

Handing	Non-handed, left/right
Exit function	No
Mechanical cylinder override	Yes
Latch	Double action latch
Dead bolt	Yes, 20mm
Input operating voltage	12-24 VDC 12-18 VAC
Rated current consumption	12 VDC idle 100mA, normal drive 250mA, max. 750mA 24 VDC idle 60mA, normal drive 150mA, max. 580mA
Relay capacity (monitoring contacts)	Max. 0.8 A 30 V AC/DC resist. 20 W
Suitable for fire doors	Yes
EN 14846:2008	3 S 2 D - L 6 1 3

This content is protected by Intellectual Property Rights Laws. The title to the content shall not pass to you, and instead shall remain with Abloy Oy or a third party holding the title. Abloy develops continuously the products and solutions offered. Therefore, the information contained in the document is subject to change without notice. ABLOY PROVIDES THIS CONTENT ON AN "AS IS" BASIS WITHOUT ANY WARRANTIES OF ANY KIND, EXPRESS, IMPLIED, OR STATUTORY."